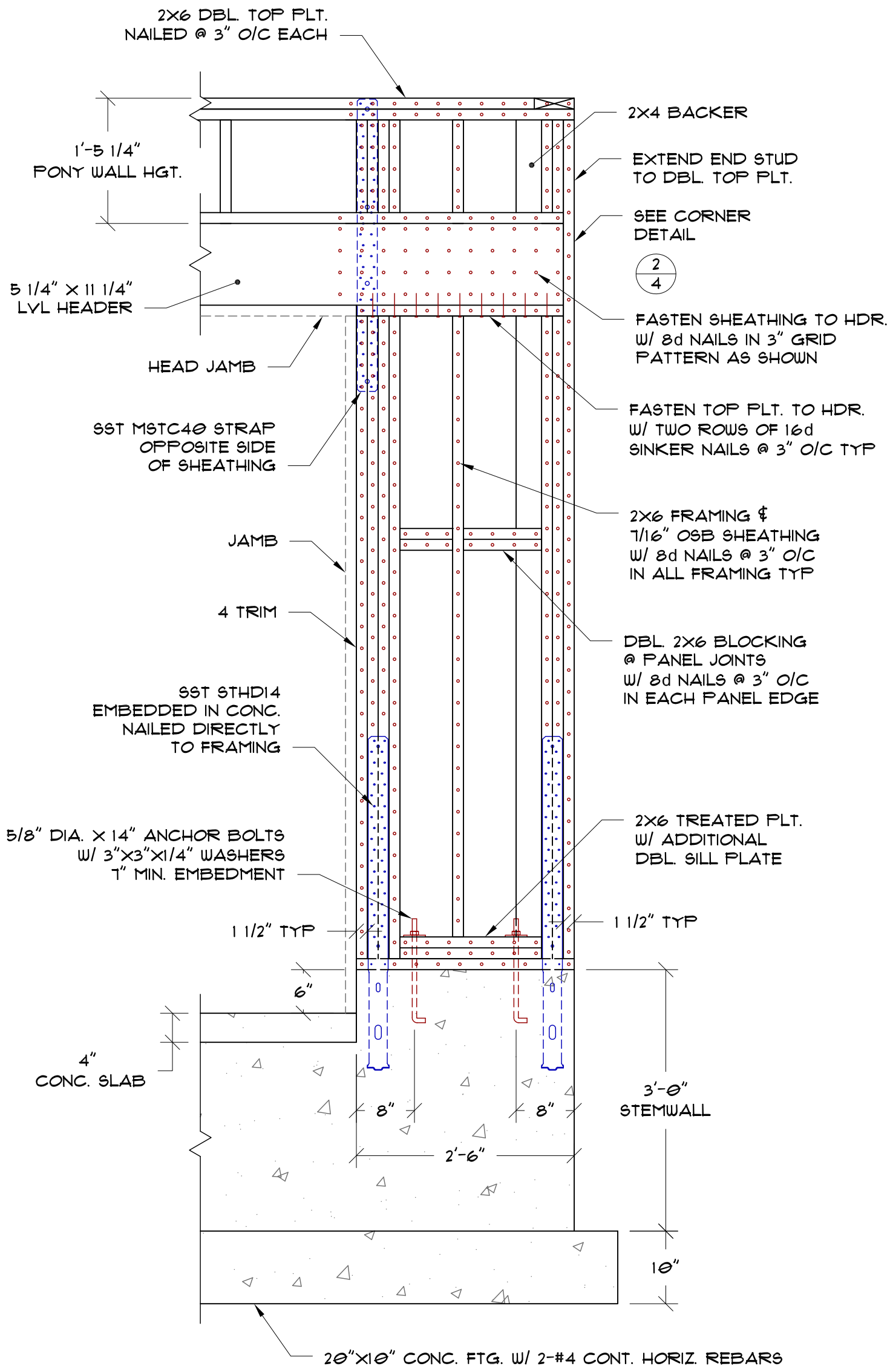
2X6 DBL. TOP PLT.
NAILED @ 3" O/C EACH
2X4 BACKER
1'-5 1/4"
PONY WALL HGT.
EXTEND END STUD
TO DBL. TOP PLT.
SEE CORNER
DETAIL
2
4
5 1/4" X 11 1/4"
LVL HEADER
FASTEN SHEATHING TO HDR.
W/ 8d NAILS IN 3" GRID
PATTERN AS SHOWN
HEAD JAMB
FASTEN TOP PLT. TO HDR.
W/ TWO ROWS OF 16d
SINKER NAILS @ 3" O/C TYP
SST MSTC40 STRAP
OPPOSITE SIDE
OF SHEATHING
2X6 FRAMING ¢
7/16" OSB SHEATHING
W/ 8d NAILS @ 3" O/C
IN ALL FRAMING TYP
JAMB
4 TRIM
DBL. 2X6 BLOCKING
@ PANEL JOINTS
W/ 8d NAILS @ 3" O/C
IN EACH PANEL EDGE
SST STHD14
EMBEDDED IN CONC.
NAILED DIRECTLY
TO FRAMING
5/8" DIA. X 14" ANCHOR BOLTS
W/ 3"X3"X1/4" WASHERS
7" MIN. EMBEDMENT
2X6 TREATED PLT.
W/ ADDITIONAL
DBL. SILL PLATE
1 1/2" TYP
1 1/2" TYP
6"
4"
CONC. SLAB
8"
8"
2'-6"
3'-0"
STEMWALL
10"
20"X10" CONC. FTG. W/ 2-#4 CONT. HORIZ. REBARS