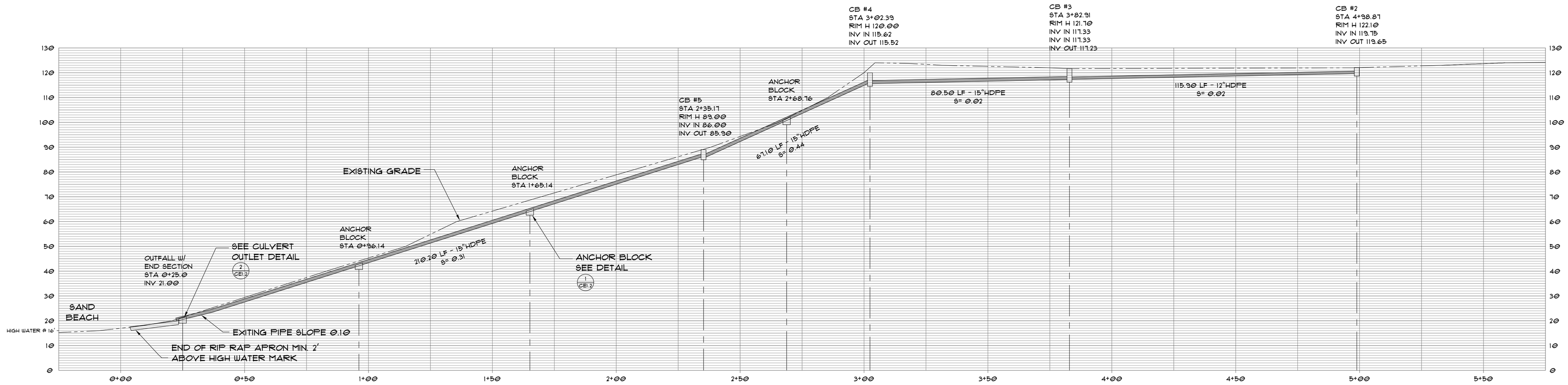

ELEVATION PROFILE

SCALE: 1"= 20'

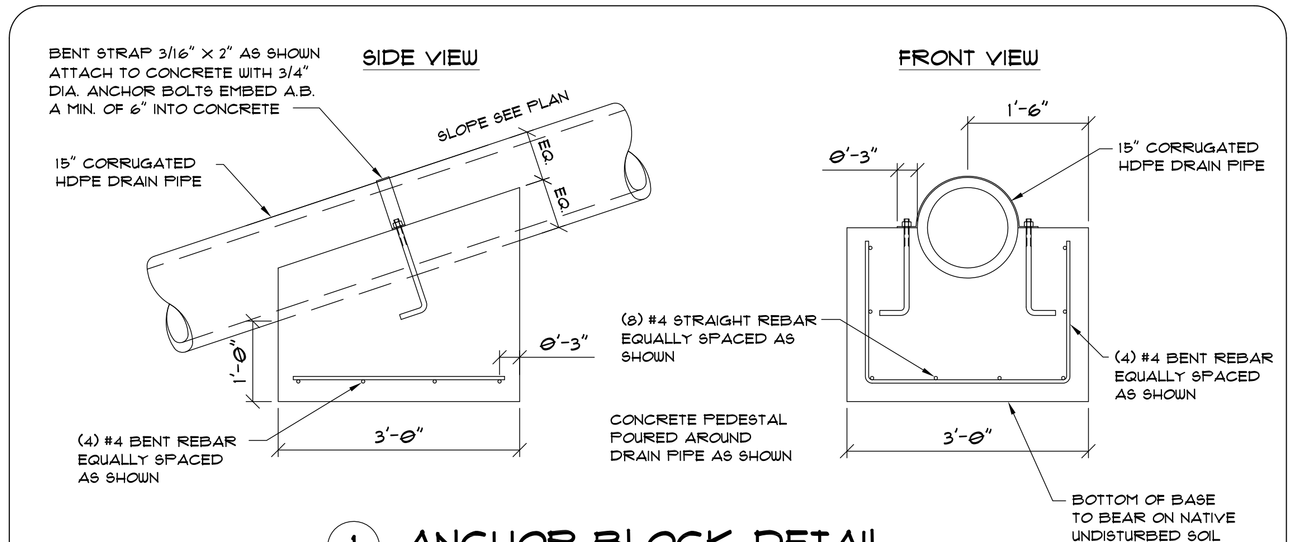

1 ANCHOR BLOCK DETAIL

SCALE: 3/4"= 1'-0"

NOTE:

ANCHOR BLOCK POURED AROUND DRAIN PIPE AS SHOWN, CONCRETE AND REBAR CONSTRUCTION SAME AS SHOWN IN ANCHOR BLOCK DETAIL (1)

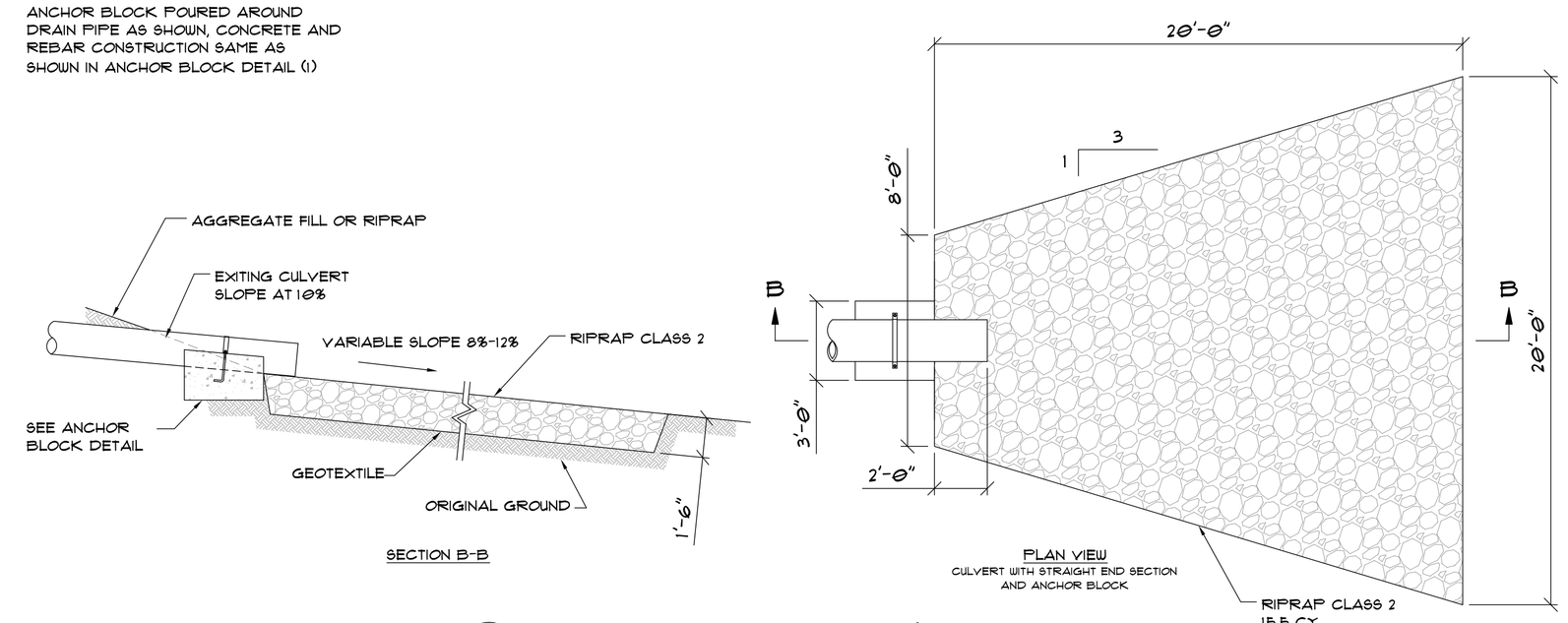

2 CULVERT OUTLET W/ ANCHOR

SCALE: 1/4"= 1'-0"

NORTHSIDE STORM WATER ELEVATION & DETAILS

NOTES:

1. BED HDPE PIPE WITH 3/4" GRAVEL
2. INSTALL ALL STORMWATER PIPES PER MANUFACTURER INSTRUCTIONS
3. FORM UP AND POUR ANCHOR BLOCKS IN SITU AS SHOWN

QUINAULT INDIAN NATION

QUINAULT ENGINEERING

PROJECT: CAONE JOURNEY 2013 AND BEYOND

SCALE 1:240

REVISION: A.1

DESIGNED BY: NPW

DATE: 9/17/2012

SHEET CONTENTS: NORTHSIDE STORMWATER ELEVATION & DETAILS

REVISION HISTORY:

CUSTOMER: QUINAULT INDIAN NATION

LOCATION: TAHOLAH, WA

SHEET

CE 1.2

OF CE4